RAYCARE v2026

MWL DICOM Conformance Statement

RayCare

v2026

Declaration of conformity

CE 2862

Complies with Medical Device Regulation (MDR) 2017/745. A copy of the corresponding Declaration of Conformity is available on request.

Safety notices

Warning and caution notices in the user documentation inform about the safe use of the product and must be followed.

WARNING!

A warning notice informs about a risk for bodily harm or death. In most cases, the risk is related to mistreatment of the patient.

CAUTION!

A caution notice informs about a risk for damage to equipment, software or data.

Note: *A note provides additional helpful information, tips or reminders.*

Copyright

This document contains proprietary information that is protected by copyright. No part of this document may be photocopied, reproduced or translated to another language without prior written consent of RaySearch Laboratories AB (publ).

All Rights Reserved. © 2026, RaySearch Laboratories AB (publ).

Printed material

Hard copies of Instructions for Use and Release Notes related documents are available upon request.

Trademarks

RayAdaptive, RayAnalytics, RayBiology, RayCare, RayCloud, RayCommand, RayData, RayIntelligence, RayMachine, RayOptimizer, RayPACS, RayPlan, RaySearch, RaySearch Laboratories, RayStation, RayStore, RayTreat, RayWorld and the RaySearch Laboratories logotype are trademarks of RaySearch Laboratories AB (publ)*.

Third-party trademarks as used herein are the property of their respective owners, which are not affiliated with RaySearch Laboratories AB (publ).

RaySearch Laboratories AB (publ) including its subsidiaries is hereafter referred to as RaySearch.

* Subject to registration in some markets.

RaySearch Laboratories

RayCare v2026
Modality Worklist DICOM Conformance Statement

1. Overview

This document is the DICOM Conformance Statement for the RayCare modality worklist. The RayCare modality worklist is a DICOM interface in the RayCare Oncology Information System (OIS) that provides integrating image modality application entities the possibility to query for worklist items. The worklist items are imaging appointments scheduled for patients in RayCare.

1.1. Content and transfer - N/A

N/A

1.2. DIMSE services

1.2.1. Verification

Table 1-1 lists support for the Verification SOP Class.

Table 1-1 Verification SOP Class

SOP Classes		**Transfer Syntax**		**SCU**	**SCP**
Verification	1.2.840.10008.1.1	Implicit VR Little Endian	1.2.840.10008.1.2	No	Yes
		Explicit VR Little Endian	1.2.840.10008.1.2.1		
		Explicit VR Big Endian	1.2.840.10008.1.2.2		

1.2.2. Storage – N/A

N/A

1.2.3. Workflow management

Table 1-2 lists all supported Workflow Management SOP Classes.

Table 1-2 Workflow Management SOP Classes

SOP Classes		**Transfer Syntax**		**SCU**	**SCP**
Modality Worklist Information Model - FIND	1.2.840.10008.5.1.4.31	Implicit VR Little Endian	1.2.840.10008.1.2	No	Yes
		Explicit VR Little Endian	1.2.840.10008.1.2.1		
		Explicit VR Big Endian	1.2.840.10008.1.2.2		

1.2.4. Query/Retrieve – N/A

N/A

1.2.5. Printing – N/A

N/A

1.3. DICOM Web Services - N/A

N/A

1.4. Media Services - N/A

N/A

1.5. Real-Time Video Service - N/A

N/A

1.6. De-Identification Profiles - N/A

N/A

1.7. Specific Character Sets

Table 1-3 lists all supported specific character sets.

Table 1-3 Supported Specific Character Sets

Defined Term	IANA	Description
ISO_IR 100	*ISO-8859-1*	*Latin Alphabet No.1 (West Europe)*
ISO_IR 192	*UTF-8*	*Unicode in UTF-8 Level 3*

2. Table of Contents

1. Overview 2
   1.1. Content and transfer - N/A 2
   1.2. DIMSE services 2
      1.2.1. Verification 2
      1.2.2. Storage – N/A 2
      1.2.3. Workflow management 2
      1.2.4. Query/Retrieve – N/A 2
      1.2.5. Printing – N/A 2
   1.3. DICOM Web Services - N/A 2
   1.4. Media Services - N/A 3
   1.5. Real-Time Video Service - N/A 3
   1.6. De-Identification Profiles - N/A 3
   1.7. Specific Character Sets 3
2. Table of Contents 4
3. Introduction 6
   3.1. Revision History 6
   3.2. Audience 6
   3.3. Remarks 6
   3.4. Terms and Definitions 7
   3.5. Abbreviations 10
   3.6. References 11
4. Implementation model 12
   4.1. Application entities and Data Flow 12
      4.1.1. Functional definition of RAYCARE MWL AE (SCP) 12
5. Networking 13
   5.1. Implementation Model ..... **Error! Bookmark not defined.**
      5.1.1. RayCare MWL DIMSE AE Application Data Flow ..... **Error! Bookmark not defined.**
   5.2. Functional Definitions of AEs ..... **Error! Bookmark not defined.**
      5.2.1. Functional definition of RayCare MWL DIMSE AE ..... **Error! Bookmark not defined.**
   5.3. AE Specifications ..... **Error! Bookmark not defined.**
      5.3.1. RayCare MWL DIMSE AE Specification ..... **Error! Bookmark not defined.**
   5.4. Network Interfaces ..... **Error! Bookmark not defined.**
      5.4.1. Physical network interfaces ..... **Error! Bookmark not defined.**
      5.4.2. Additional Protocols ..... **Error! Bookmark not defined.**

5.4.3. IPv4 and IPv6 Support ..... **Error! Bookmark not defined.**
5.5. Configuration ..... **Error! Bookmark not defined.**
5.5.1. Local AE Titles ..... **Error! Bookmark not defined.**
5.5.2. Remote AE Title ..... **Error! Bookmark not defined.**
5.5.3. Parameters ..... **Error! Bookmark not defined.**
6. Media Interchange ..... **Error! Bookmark not defined.**
7. Support of character sets ..... **Error! Bookmark not defined.**
8. Security ..... **Error! Bookmark not defined.**
8.1. Association Level Security ..... **Error! Bookmark not defined.**
8.2. Application Level Security ..... **Error! Bookmark not defined.**
9. Annexes ..... **Error! Bookmark not defined.**

3. Introduction

3.1. Revision History

Table 3-1. Revision History

Revision	Date	Product version(s)	Change
1.0	2026-xx-xx	RayCare v2026	Initial version

3.2. Audience

This document is intended for the audience listed below. It is assumed that the reader has a working knowledge of the DICOM Standard.

The document structure was designed for easier access to relevant information for different user groups:

- Clinical Users, who want to get an overview of the implemented interoperability features of the system can see Section 4 Implementation Model.
- Personnel involved in Sales can use the information in Section 1 to assess the compatibility between different systems involved in a sales situation.
- System Integrators can use information in Section 6 during system installation and also information from Section 5 Service and Interoperability Description for details regarding the implemented services.
- Field Service Engineers can use the details from Section 5 Service and Interoperability Description and from Section 7 Network and Media Communication Details for troubleshooting.
- Hospital IT staff focusing on security can use the details provided in Section 8 Security regarding implemented Security features.

3.3. Remarks

The scope of this DICOM Conformance Statement is to facilitate integration between RayCare and other DICOM products. The Conformance Statement should be read and understood in conjunction with the DICOM Standard [1]. DICOM by itself does not guarantee interoperability.

- The Conformance Statement does, however, facilitate a first-level comparison for interoperability between different applications supporting compatible DICOM functionality.
- This Conformance Statement should not replace validation with other DICOM equipment to ensure proper exchange of intended information. In fact, it is the user's responsibility to perform the following validation activities:
    - The comparison of Conformance Statements from RayCare and other DICOM conformant equipment is the first step towards assessing interconnectivity and interoperability between those systems.
    - Test procedures should be defined and executed to validate the required level of interoperability with specific DICOM conformant equipment, as established by the healthcare facility.

RaySearch is also active within the Integrating the Healthcare Enterprise (IHE). Contact RaySearch for more info regarding adherence to IHE profiles.

3.4. Terms and Definitions

The following list includes DICOM Terms, that are used throughout this Conformance Statement:

Abstract Syntax	The information agreed to be exchanged between applications, generally equivalent to a Service/Object Pair (SOP) Class. Examples: Verification SOP Class, Modality Worklist Information Model Find SOP Class, Computed Radiography Image Storage SOP Class.
Application Entity (AE)	A representation of the external behavior of an application process in terms of DICOM Network Services, Web Services and/or media exchange capabilities implemented in one or more roles. A single device may have multiple Application Entities.
Application Entity Title (AET)	The externally known name of an Application Entity, used to identify a DICOM application to other DICOM applications on the network.
Application Context	The specification of the type of communication used between Application Entities. Example: DICOM network protocol.
Association	A network communication channel set up between Application Entities.
Attribute	A unit of information in an Information Object Definition; a Data Element identified by a tag. The information may be a complex data structure (Sequence), itself composed of lower-level data elements. Examples: Patient ID (0010,0020), Accession Number (0008,0050), Photometric Interpretation (0028,0004), Procedure Code Sequence (0008,1032).
Data Element	A unit of information as defined by a single entry in the data dictionary. An encoded Information Object Definition (IOD) Attribute that is composed of, at a minimum, three fields: a Data Element Tag, a Value Length, and a Value Field. For some specific Transfer Syntaxes, a Data Element also contains a VR Field where the Value Representation of that Data Element is specified explicitly
Information Object Definition (IOD)	The specified set of Attributes that comprise a type of data object; does not represent a specific instance of the data object, but rather a class of similar data objects that have the same properties. Examples: MR Image IOD, CT Image IOD, Print Job IOD. The Attributes within an IOD may be specified as Mandatory (Type 1), Required but possibly unknown (Type 2), or Optional (Type 3), and there may be conditions associated with the use of an Attribute (Types 1C and 2C).
Media Application Profile	The specification of DICOM information objects and encoding exchanged on removable media (e.g., CDs).

Module	A set of Attributes within an Information Object Definition that are logically related to each other. Example: Patient Module includes Patient's Name, Patient ID, Patient' Birth Date, and Patient's Sex.
Negotiation	First phase of Association establishment that allows Application Entities to agree on the types of data to be exchanged and how that data will be encoded.
Origin Server	Refers to the program that can originate authoritative responses to HTTP requests for a given Target Resource. The term "server" refers to any implementation that receives a web service request message from a user agent.
Presentation Context	The set of DICOM Network Services used over an Association, as negotiated between Application Entities; includes Abstract Syntaxes and Transfer Syntaxes.
Private SOP Class	A SOP Class that is not defined in the DICOM Standard but is published in an implementation's Conformance Statement.
Protocol Data Unit (PDU)	A packet (piece) of a DICOM message sent across the network. Devices must specify the maximum size packet they can receive for DICOM messages.
Security Profile	A set of mechanisms, such as encryption, user authentication, or digital signatures, used by an Application Entity to ensure confidentiality, integrity, and/or availability of exchanged DICOM data.
Service Class Provider (SCP)	Role of an Application Entity that provides a DICOM network service; typically, a server that performs operations requested by another Application Entity (Service Class User). Examples: Picture Archiving and Communication System (image storage SCP, and image query/retrieve SCP), Radiology Information System (modality worklist SCP).
Service Class User (SCU)	Role of an Application Entity that uses a DICOM Network Service; typically, a client. Examples: imaging modality (image storage SCU, and modality worklist SCU), imaging workstation (image query/retrieve SCU).
Service/Object Pair Class (SOP Class)	The specification of the network or media transfer (service) of a particular type of data (object) ; the fundamental unit of a DICOM interoperability specification. Examples: Ultrasound Image Storage Service, Basic Grayscale Print Management.
Service/Object Pair Instance (SOP Instance)	An information object; a specific occurrence of information exchanged in a SOP Class. E.g., a specific X-ray image.

Specialized SOP Class	A SOP Class that is derived from the Standard that is specialized by additional type 1, 1C, 2, 2C, or 3 Attributes, by enumeration of specific permitted Values for Attributes, or by enumeration of specific permitted Templates. The additional Attributes may either be drawn from the Data Dictionary in PS3.6 or may be Private Attributes.
Standard SOP Class	A SOP Class defined in the Standard, and that is implemented and used without any modifications.
Standard Extended SOP Class	A SOP Class that is defined in the standard, and that is extended by additional type 3 Attributes. The additional Attributes may either be drawn from the DICOM Data Dictionary in PS3.6 or may be Private Attributes.
Tag	A 32-bit identifier for a Data Element, represented as a pair of four-digit hexadecimal numbers, the "group" and the "element". If the "group" number is odd, the tag is for a private (manufacturer-specific) data element. Examples: (0010,0020) [Patient ID], (07FE,0010) [Pixel Data], (0019,0210) [private data element].
Transfer Syntax	The encoding used for exchange of DICOM information objects and messages. Examples: JPEG compressed (images), Little Endian Explicit Value Representation.
TLS-Secured Port	TCP port on which an implementation accepts TLS connections to exchange DICOM information.
Unique Identifier (UID)	A globally unique "dotted decimal" string that identifies a specific object or a class of objects; an ISO-8824 Object Identifier. Examples: Study Instance UID, SOP Class UID, SOP Instance UID.
Value Representation (VR)	The format type of an individual DICOM data element, such as text, an integer, a person's name, or a code. DICOM information objects can be transmitted with either explicit identification of the type of each data element (Explicit VR), or without explicit identification (Implicit VR) ; with Implicit VR, the receiving application must use a DICOM data dictionary to look up the format of each data element.

The following list includes product specific definitions used throughout this Conformance Statement

PACS Connection	A configuration entity in RayCare administration workspace that represents an external DICOM application entity [AE] on the network. The PACS connection needs to be configured to allow a remote application entity to communicate with the RayCare DICOM interfaces.

3.5. Abbreviations

Abbreviations that are used in this DICOM Conformance Statement are listed here

AE	Application Entity
AET	Application Entity Title
CID	Context Identifier
DCS	DICOM Conformance Statement
DHCP	Dynamic Host Configuration Protocol
DICOM	Digital Imaging and Communications in Medicine
ELE	Explicit VR Little Endian
IANA	Internet Assigned Numbers Authority
IHE	Integrating the Healthcare Enterprise
ILE	Implicit VR Little Endian
IOD	Information Object Definition
IPv4	Internet Protocol version 4
IPv6	Internet Protocol version 6
ISO	International Organization for Standardization
MPPS	Modality Performed Procedure Step
MWL	Modality Worklist
NEMA	National Electrical Manufacturers Association
NTP	Network Time Protocol
OID	Object Identifier
OIS	Oncology Information System
OS	Origin Server
PDU	Protocol Data Unit
PHI	Protected Health Information
PPS	Performed Procedure Step

SCP	Service Class Provider
SCU	Service Class User
SOP	Service-Object Pair
SPS	Scheduled Procedure Step
TCP/IP	Transmission Control Protocol/Internet Protocol
UI	User Interface
UID	Unique Identifier
UL	Upper Layer
VR	Value Representation

3.6. References

[1] National Electrical Manufacturers Association (NEMA), Rosslyn, VA USA. *PS3 / ISO 12052 Digital Imaging and Communications in Medicine (DICOM) Standard*. http://www.dicomstandard.org.

4. Implementation model

The RayCare modality worklist is a DICOM interface in the RayCare Oncology Information System (OIS) that provides integrating image modality application entities the possibility to query for worklist items. The worklist items are imaging appointments scheduled for patients in the RayCare OIS.

4.1. Application entities and Data Flow

The network and media interchange application model for the RayCare modality worklist is shown in Figure 4-1 RayCare MWL Application Data Flow Diagram.

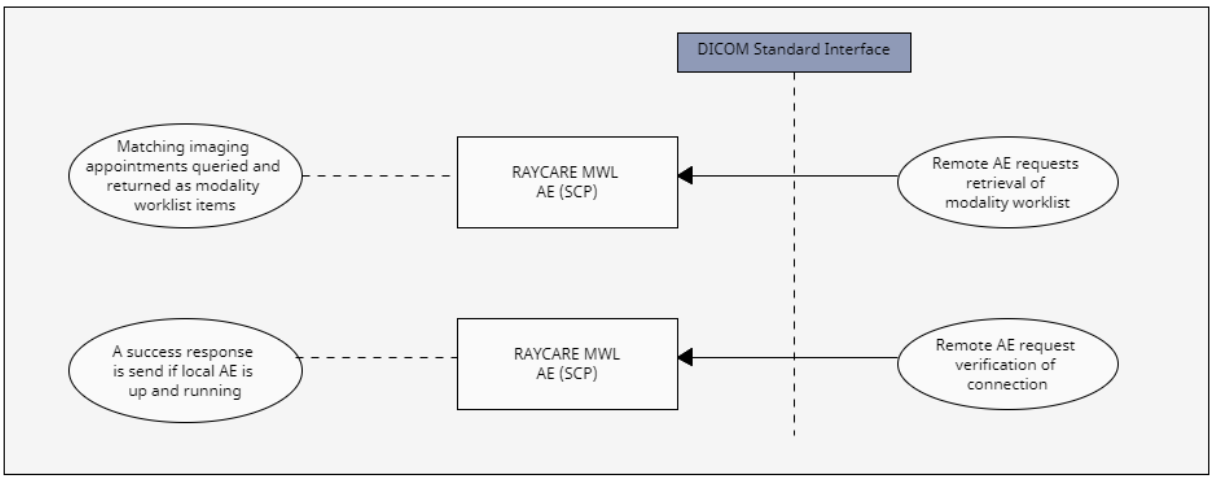

Figure 4-1 RayCare MWL Application Data Flow Diagram

4.1.1. Functional definition of RAYCARE MWL AE (SCP)

The RayCare MWL AE acts as a basic worklist management service class provider (SCP) allowing remote application entities to request retrieval of modality worklist items that are scheduled for one or more imaging devices.

The reception of a modality worklist query (C-Find) from a remote application entity will activate the RayCare MWL AE. The attributes in the query request will be matched against all patient appointments that are scheduled for an imaging device and matching results will be returned as a response to the requestor. Appointments will only be returned for a specific device if the remote application entity is configured in RayCare to allow retrieval of modality worklist items for that device.

The RayCare MWL AE also acts a verification service class provider (SCP), allowing remote application entities to verify application-level communication between that remote application entity and the RayCare modality worklist by means of a C-Echo request. The RayCare MWL AE will respond with a C-ECHO response if the modality worklist service is up and running.

5. Service and Interoperability Description

5.1. Mapping of Services to Application Entities

Table 5-1 provides an overview of the Application Entities and the Services supported by the AE.

Table 5-1 Application entity and supported service mapping table

Application Entity	Supported Services	Role	
		DIMSE	
		SCU	SCP
RayCare MWL AE	*Verification*	N	Y
	Basic Worklist Management	N	Y

5.2. DIMSE services

5.2.1. Verification Service

5.2.1.1. SCP of the Verification SOP class

As a Service Class Provider of the Verification SOP Class, the RayCare MWL issues the C-ECHO-RSP primitive as response on any incoming C-ECHO requests from a remote DICOM AE.

5.2.2. Basic Worklist Management Service

5.2.2.1. SCP of the Modality Worklist Information Model - FIND SOP Class

As a Service Class Provider of the Modality Worklist Information Model - FIND SOP Class, the RayCare MWL uses the C-FIND-RSP to communicate matches back to the SCU. It supports the Matching Keys listed in Table 5-2.

In the "Matching Type" column, the following Values can be used:

- SINGLE_VALUE: SCP can perform single Value matching on this Attribute.
- UID: SCP can perform List of UID matching on this Attribute.
- WILDCARD: SCP can perform Wildcard matching on this Attribute.
- RANGE: SCP can perform Range matching on this Attribute.
- SEQUENCE: SCP can perform sequence matching on this Attribute.
- UNIVERSAL: SCP can provide the Attribute in the C-FIND response (i.e., universal matching).

Table 5-2 Supported C-FIND Return Keys for Modality Worklist - SCP

Attribute Name	Tag	Matching Type	Comments
Scheduled Procedure Step			
Schedule Procedure Step Sequence	(0040,0100)	*SEQUENCE*	
> Scheduled Procedure Step ID	(0040,0009)		Automatically generated identifier unique for the imaging appointment
> Scheduled Procedure Step Description	(0040,0007)		The title of the imaging appointment

Attribute Name	Tag	Matching Type	Comments
> Scheduled Procedure Step Start Date	(0040, 0002)	*RANGE*	Scheduled start date of the imaging appointment
> Scheduled Procedure Step Start Time	(0040, 0003)	*RANGE*	Scheduled start time of the imaging appointment
> Scheduled Procedure Step Location	(0040,0011)		Always empty
> Scheduled Station Name	(0040,0010		Name of the scheduled device for the imaging appointment
> Scheduled Station AE-title	(0040,0001)	*SINGLE_VALUE*	AE-title of the scheduled device for the imaging appointment
> Modality	(0008,0060)	*SINGLE_VALUE*	Modality from the appointment template for the imaging appointment
> Scheduled Performing Physician's Name	(0040,0006)		Always empty
> Scheduled Protocol Code Sequence	(0040,0008)		Always empty
> Pre-Medication	(0040,0012)		Attribute returned if requested, but always empty
> Requested Contrast Agent	(0032,1070)		Attribute returned if requested, but always empty
Requested Procedure			
Requested Procedure ID	(0040,1001)		Automatically generated identifier unique for the imaging appointment
Requested Procedure Description	(0032,1060)		The title of the imaging appointment
Requested Procedure Code Sequence	(0032,1064)		Attribute returned if requested, but always empty
Study Instance UID	(0020,000D)		Automatically generated UID unique for the imaging appointment
Requested Procedure Priority	(0040,1003)		Always empty
Patient Transport Arrangements	(0040,1004)		Always empty
Referenced Study Sequence	(0008,1110)		
> Referenced SOP Class UID	(0008,1150)		Always "1.2.840.10008.3.1.2.3.1"

Attribute Name	Tag	Matching Type	Comments
> Referenced SOP Instance UID	(0008,1155)		Same value as Study Instance UID
Imaging Service Request			
Accession Number	(0008,0050)		Always empty
Requesting Physician	(0032,1032)		Always empty
Referring Physician's Name	(0008,0090)		Always empty
Visit			
Current patient location	(0038,0300)		Always empty
Admission ID	(0038,0010)		Always empty
Referenced Patient Sequence	(0008,1120)		Always empty
Patient			
Patient ID	(0010,0020)	*SINGLE_VALUE*	Primary patient ID for the patient scheduled for the imaging appointment
Issuer of Patient ID	(0010,0021)		Always empty
Patient’s Name	(0010,0010)	*WILDCARD*	Full patient name (title, first name, middle name. last name, and suffix) for the patient scheduled for the imaging appointment
Patient’s Birthdate	(0010,0030)		Date of birth for the patient scheduled for the imaging appointment
Patient’s Sex	(0010,0040)		Gender for the patient scheduled for the imaging appointment
Confidentiality constraint on patient data	(0040,3001)		Always empty
Patient State	(0038,0500)		Always empty
Pregnancy Status	(0010,21C0)		Always empty
Medical Alerts	(0010,2000)		Always empty
Allergies	(0010,2110)		Always empty
Patient Weight	(0010,1030)		Always empty
Special Needs	(0038,0050)		Always empty

The RayCare MWL AE does not support handling C-FIND-CANCEL requests when received from a remote DICOM AE.

Combined date and time range matching is performed using both Scheduled Procedure Step Start Date and Scheduled Procedure Step Start Time when both attributes contain values in the identifier of the C-Find request.

The TimezoneOffsetFromUTC attribute is always returned in the identifier of the C-Find response. The TimezoneOffsetFromUTC attribute and any time zone offset information in Date, Time and DateTime attributes are however always ignored when provided in the identifier of the C-Find request.

5.3. DICOM Web Services – N/A

N/A

5.4. Media Services – N/A

N/A

5.5. Real-Time video services – N/A

N/A

5.6. Cross Service Considerations – N/A

N/A

5.7. Specific Character Sets

See Section 1.7 for supported Values for Specific Character Set (0008,0005).
Generic configuration for Specific Character Sets is covered in Section 6.1. Service specific configuration for Specific Character Sets is addressed in respective subsections of Section 6.2 or Section 6.3.

6. Configuration

This chapter describes the configuration parameters for the RayCare modality worklist. RayCare allows users (system administrators) to change certain parameters using the RayCare administration interface. Service personnel is required for updates to other configuration parameters such as the AE title and listening port for the modality worklist.

Throughout all subsections the following Values can be used in the "Configurable" column:

- USER: The parameter is configurable by the user.
- SERVICE: The parameter is configurable by service personnel.
- FIXED: The parameter is not configurable (it has a fixed Value). The Value is required for the configuration of the remote system.
- N/A: The parameter is not applicable for the local or the remote system

6.1. General Configuration Parameters

Table 6-1 lists general configuration parameters applicable across all supported DICOM Services.

Table 6-1 General Configuration Parameters

Parameter	Configurable	Default Value	Comments
General Parameters			

Parameter	Configurable	Default Value	Comments
Timeout waiting for acceptance or rejection Response to an Association Open Request. (Application-Level timeout)	N/A		
Timeout waiting for a response to an Association release request (Application-Level Timeout)	N/A		
TCP/IP Settings			
TCP/IP Send Buffer	FIXED	8192 Bytes	
TCP/IP Receive Buffer	FIXED	8192 Bytes	
DICOM Services Parameters			
Inactive Association Timeout	SERVICE	10 seconds	
Maximum number of simultaneous Associations accepted	SERVICE	0 (unlimited)	
Whitelisted certificates	SERVICE		
Client Certificate Requested	SERVICE	True	If TLS connections should indicate support for client certificates
Check Certificate Revocation	SERVICE	False	
TLS Handshake Timeout	SERVICE	60 secoonds	

6.2. Configuration of DIMSE Services

The tables in the following subsections show the configuration parameters required for DIMSE Services.

In order to identify whether RayCare MWL is an SCP and/or an SCU, the following applies:

- SCP: The (Secured) Local Called AET and Remote Calling AET parameters are present.
- SCU: The (Secured) Local Calling AET and Remote Called AET parameters are present.

6.2.1. Basic Worklist Management Service Configuration

Table 6-2 lists Worklist Service configuration parameters.

Table 6-2 Worklist Service Parameters

Local Worklist Configuration Parameters - Worklist Service			
Parameter	**Configurable**	**Default Value**	**Comments**
Called AE Title (SCP)	SERVICE	RAYMWL	See note 1, 6

Local Worklist Configuration Parameters - Worklist Service			
Parameter	**Configurable**	**Default Value**	**Comments**
Port	SERVICE	10105	See note 6.
Encrypted Port	SERVICE	2763	See note 6.
Specific Character Set (MWL)	SERVICE	UTF8	[UTF8; LatinAlphabet1] See note 2
Max query results size	USER	1000	[1 … 10000]
Remote Configuration Parameters - Worklist Service			
Parameter	**Configurable**	**Default Value**	**Comments**
Calling AE Title (SCU)	USER		
Port	USER		
Host	USER		
Encryption levels	USER		See table below
Allow Query on MWL	USER		[Yes; No]
Allowed Devices	USER		See note 3, 4
Disable Host Validation	USER	No	[Yes; No], See note 5

Notes:

1. The default value for the local Called AE Title (SCP) will always be changed by service personnel according to environment guidelines if the RayCare MWL is installed in a test or acceptance environment.
2. The configured specific character set will be used when serializing the modality worklist query result. See also section 1.7 for supported Specific Character Sets.
3. Allowed Devices can only be selected if Allow Query on MWL is set to Yes.
4. With Allowed Devices it is possible to configure for a remote DICOM AE if that AE is allowed to retrieve modality worklist items scheduled for a specific (imaging) device.
5. IP-address validation on incoming associations is by default performed against the configured Host for the remote DICOM AE. This validation can be disabled using the Disable Host Validation configuration.
6. Both Called AE title and Port values are limited to values that are not already used by other DICOM AE's in RayCare.

Table 6-3 Encryption levels

Direction	**Option**	**Description**
Incoming	Encryption optional	The AE is freely allowed to connect
Incoming	Encryption required	The AE must connect to the encrypted port, with or without a client certificate
Incoming	Encryption required with a client certificate	The AE must connect to the encrypted port, with a client certificate. The client certificate must either be whitelisted or passing validation by the operating system.

Incoming	No encryption allowed	The AE must connect to the unencrypted port
Outgoing	Encryption used	Connections to the AE will be done using TLS, without a client certificate.
Outgoing	No encryption used	Connections to the AE will be done without TLS.

6.3. Configuration of DICOM Web Services – N/A

N/A

6.4. Configuration of Media Storage Service – N/A

N/A

6.5. Configuration of Real-Time Video Service – N/A

N/A

6.6. Configuration of Audit Trail – Syslog – N/A

N/A

7. Network and Media communication details

7.1. General

The cross interaction between the AEs is depicted in the diagram below.

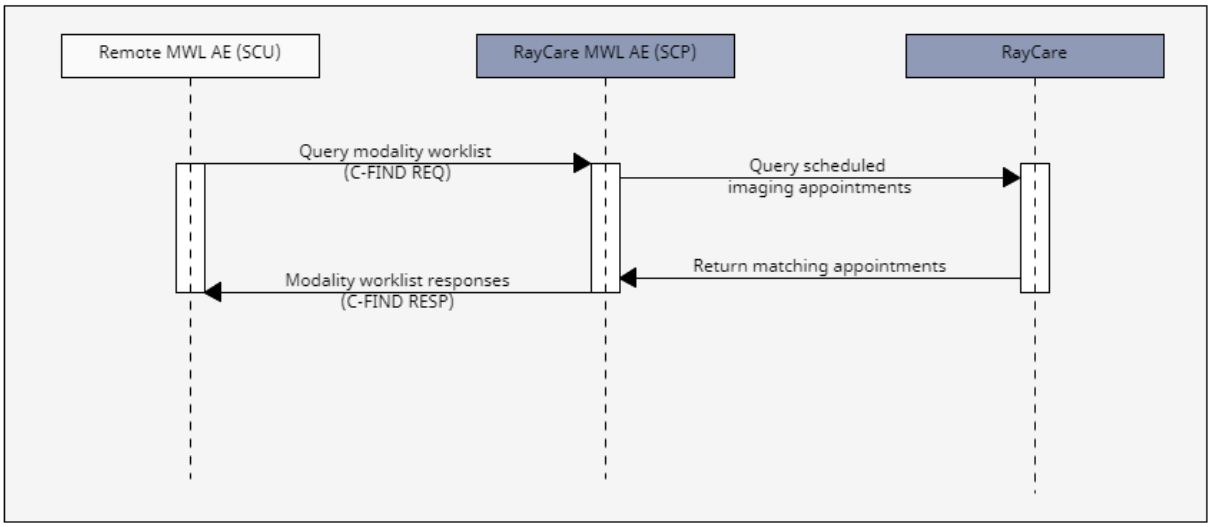

Figure 7-1 Real-World Activity and Cross AE interaction

7.1.1. General association parameters

Table 7-1 lists Association parameters applicable to all AEs on the system

Table 7-1 General Association Parameters

	Name	Value
Networking Services	Application Context Name	1.2.840.10008.3.1.1.1
	Implementation Class UID	1.2.752.243.2
	Implementation Version Name	fo-dicom 5.2.5
	Maximum PDU Length	262144

	Name	Value
	ARTIM Timeout	N/A
	Maximum number of simultaneous Associations as Association Initiator	N/A
	Maximum number of simultaneous Associations as Association Acceptor	Default: 0 (unlimited)
	Maximum number of outstanding asynchronous Transactions	1

7.2. Specifications

7.2.1. RayCare MWL AE Application Entity

7.2.1.1. Sequencing of Real-World Activities for RayCare MWL AE

As an SCP, RayCare MWL accepts Association requests for Verification. When receiving a C-ECHO-RQ, RayCare MWL will always return a C-ECHO-RSP with status SUCCESS.

As an SCP, RayCare MWL accepts Association requests for Modality Worklist information model query requests. When receiving a C-FIND-RQ RayCare MWL will try to match imaging appointments using the query identifier provided keys and return a C-FIND-RSP with a modality worklist item and PENDING status for each matching response. Finally, after all matching worklist items are returned, a C-FIND-RSP with SUCCESS status will be sent.

7.2.1.2. Association parameters of RayCare MWL AE

See 7.1.1. for general association parameters.

7.2.1.3. Association Initiation

RayCare MWL does not initiate associations,

7.2.1.4. Association Acceptance

This section details the Association policies of the Application Entity when it is the acceptor of an Association.

7.2.1.4.1. Real-World Activity – Receive Verification Request

When receiving a C-ECHO-RQ, RayCare MWL responds with a C-ECHO-RSP with status SUCCESS.

The association is not accepted when either the Calling AE title or the Called AE title is unknown. Nor is it accepted if the encryption level does not match the settings for the Calling AE title.

Extended negotiation

There is no extended negotiation support for the Verification SOP class.

Transfer Syntax Selection Policies

There are no transfer syntax selection policies for the Verification SOP class.

7.2.1.4.2. Real-World Activity – Receive Modality Worklist Query request

When receiving a C-FIND-RQ, RayCare MWL responds with a C-FIND-RSP for each matching worklist item and a final C-FIND-RSP with status success.

The association is not accepted when either the Calling AE title or the Called AE title is unknown

Extended negotiation

The Extended Negotiation parameters for all services that are requested by the Application Entity for the Real-World Activity – Receive modality worklist query request are described in table 7-2.

Table 7-2 Extended Negotiation for Receive Modality Worklist Query request of RayCare MWL - Association Acceptance

SOP Class	Extended Negotiation	Support	Requested Value
Modality Worklist			
Modality Worklist Information Model - FIND (1.2.840.10008.5.1.4.31)	Fuzzy semantic matching of person names	No	N/A
	Time zone query adjustment	No	N/A

Note: Fuzzy semantic matching of person names is not supported, but if requested in extended negotiation it is accepted. Only wildcard matching is supported on Person name attributes, see section 5.2.2.1

Transfer Syntax Selection Policies

This section describes the Transfer Syntax preference for different SOP Classes or SOP Class groups when there are multiple Transfer Syntaxes provided by the Association initiator for Real-World Activity Receive Modality Worklist Query request of RayCare MWL of the system.

Table 7-3 Transfer Syntax Selection Preference Order

Preference Order	Transfer Syntax	UID	Comments
1	Explicit VR Little-Endian Transfer Syntax	1.2.840.10008.1.2.1	
2	Explicit VR Big-Endian Transfer Syntax	1.2.840.10008.1.2.2	
3	Implicit VR Little-Endian Transfer Syntax	1.2.840.10008.1.2	

7.3. Status codes

7.3.1. General AE Communication and Failure Behavior and Handling

7.3.1.1. Communication Failure Handling as Association Acceptor

Table 7-4 describes how the AE responds when it receives an Association request that leads to a failure in communication.

Table 7-4 DICOM Communication Failure Handling as Association Acceptor

Exception	Failure response
Failure during processing of an Association request	The association request could not be parsed. An association request with the same format will not succeed later. AE responds with Association-RJ
Calling AE not recognized	The association request contained an unrecognized Calling AE Title. An association request with the same parameters will not succeed later, unless configuration changes are made. This rejection occurs when the association initiator

Exception	Failure response
	AE is not (correctly) configured as a PACS connection in the RayCare administration interface. AE responds with Association-RJ
Host is not matching Calling AE connection configuration	Host validation is by default enabled for the configured PACS connection in the RayCare administration interface. This rejection occurs if the association is requested from a different IP-address or host name than configured. AE responds with Association-RJ
Called AE not recognized	The association request contained an unrecognized Called AE Title. An association request with the same parameters will not succeed later unless configuration changes are made. This rejection occurs when the association initiator is incorrectly configured and attempts to address the association acceptor (RayCare MWL) using the wrong AE Title. (default AE Title: RAYMWL) AE responds with Association-RJ
Encryption is not matching calling AE configuration	The association requested does not meet the encryption criteria configured for that AE. An association request with the same parameters will not succeed later, unless configuration changes are made. *AE responds with Association-RJ

7.3.2. DIMSE Services

7.3.2.1. Verification Service

7.3.2.1.1. SCP of the Verification SOP Class – C-ECHO

Table 7-5 lists the Status Codes that the SCP of the Verification SOP Class supports for the C-ECHO message and defines conditions in which the Status Codes are listed.

Table 7-5 Status codes for C-ECHO of the Verification SOP class - SCP

Service Status	Further Meaning	Status Code	Condition
Success	Verification succeeded	0000	Request is successfully received

7.3.2.2. Basic Worklist Management Service

7.3.2.2.1. SCP of the Modality Worklist Information Model Find SOP Class - C-FIND

Table 7-6 lists the Status Codes that the SCP of the Modality Worklist Information Model Find SOP Class supports for the C-FIND message and defines conditions in which the listed Status Codes are sent.

Table 7-6 Status Codes for C-FIND of the Modality Worklist Information Model SOP Class - SCP

Service Status	Further Meaning	Status Code	Condition
Success	Matching is complete - No final identifier is supplied	0000	Matching is completed after any pending results are returned or if no worklist items was found
Failure	Refused: Out of Resources	A700	The number of results for the requested query exceeded the configured max query response limit.
	SOP Class Not Supported	0122	The C-Find request does not have the expected SOP class UID.
	Error: Unable to process	C000	A general processing error occurred during the processing of the modality worklist c-Find query request
	Error: Query On Modality Worklist Is Not Allowed For Calling AE	C047	A modality worklist C-Find query request was received from a remote application entity for which the configuration on the PACS connection does not allow MWL queries
Pending	Matches are continuing - Current Match is supplied and any Optional Keys were supported in the same manner as Required Keys.	FF00	A matching worklist item is returned
	Matches are continuing - Warning that one or more Optional Keys were not supported for existence for this Identifier	FF01	A matching worklist item is returned and not supported optional keys given by the query were ignored

7.3.3. DICOM Web Services – N/A

N/A

8. Security

RayCare modality worklist supports TLS encryption for DIMSE connections, but it is assumed that RayCare modality worklist is also used within a secure environment and that this secure environment includes at a minimum:

- Firewall or router protections to ensure that only approved external hosts have network access to RayCare MWL.
- Any communication with external hosts and services outside the locally secured environment use appropriate secure network channels (e.g. such as a Virtual Private Network (VPN))

RayCare modality worklist uses host validation to verify that the remote application entity can only access the worklist if the connection is opened from the correct configured host with the correct encryption level. In addition, a remote application entity is only able to retrieve worklist items for the imaging device that it is authorized for. See for more information section 6.2.1 Basic Worklist Management Service Configuration.

Security logging is performed on all connection attempts to the RayCare modality worklist.

The RayCare modality worklist has by default one unsecured endpoint and one secured endpoint. The secured endpoint supports DICOM TLS. RayCare modality worklist defers the selection of protocols, algorithms, ciphers and hashes to the Operating System, specifically to the Schannel configuration in Windows.

A. Information Object Definitions – N/A

N/A

B. Structured Report Content Encoding – N/A

N/A

C. Security Details – N/A

N/A

D. Mapping of attributes – N/A

N/A

E. Code Set Usage – N/A

N/A

CONTACT INFORMATION

RaySearch Laboratories AB (publ)
Eugeniavägen 18C
SE-113 68 Stockholm
Sweden

Contact details head office
P.O. Box 45169
SE-104 30 Stockholm, Sweden
Phone: +46 8 510 530 00
Fax: +46 8 510 530 30
info@raysearchlabs.com
www.raysearchlabs.com

RaySearch Americas
Phone: +1 347 477 1935

RaySearch China
Phone: +86 137 0111 5932

RaySearch India
E-mail: manish.jaiswal@raysearchlabs.com

RaySearch Singapore
Phone: +65 8181 6082

RaySearch Australia
Phone: +61 411 534 316

RaySearch France
Phone: +33 (0)1 76 53 72 02

RaySearch Japan
Phone: +81 (0)3 44 05 69 02

RaySearch UK
Phone: +44 (0)2039 076791

RaySearch Belgium
Phone: +32 475 36 80 07

RaySearch Germany
Phone: +49 (0)172 7660837

RaySearch Korea
Phone: +82 01 9492 6432

RSL-D-RC-v2026-MWLDCS-EN-1.0-2026-06-26
RayCare v2026 MWL DICOM Conformance Statement

RaySearch Laboratories